RESERVE POWER

AGM 10 JAHRESTYP

Q-BATTERIES QUALITY

12LSX-24

12 V 24 Ah

Design lifetime: 10 years

Q-Batteries 12LSX-24 is an AGM battery with extended design lifetime of 10 years. It is designed for stand-by applications such as emergency-lighting or UPS-systems.

Application:

burglar-systems, UPS-systems, emergency-lighting-systems

standard | AGM | UPS | security | telecommunication

Specification:

baterias.com

Voltage Per Unit	12 V		
Capacity	24 Ah (10 h)		
Cells Per Unit	6		
Weight	8.1 kg +/- 3%		
Max. Discharge Current	240 A (5 sec.)		
Short circuit current	850 A		
Operating Temperature Range Normal	Discharge: - 20 °C – 60 °C	Charge: -10 °C – 60 °C	Storage: - 20 °C – 60 °C
Self Discharge	Valve Regulated Lead Acid (VRLA) batteries can be stored for more than 6 months at 25°C. Self-discharge ratio less than 3% per month at 25°C. Please charge batteries before using.		
Terminal	F13		
Container Material	A.B.S. (UL94-HB)		

Dimensions:

166 mm Length x 175 mm Width x 125 mm Height

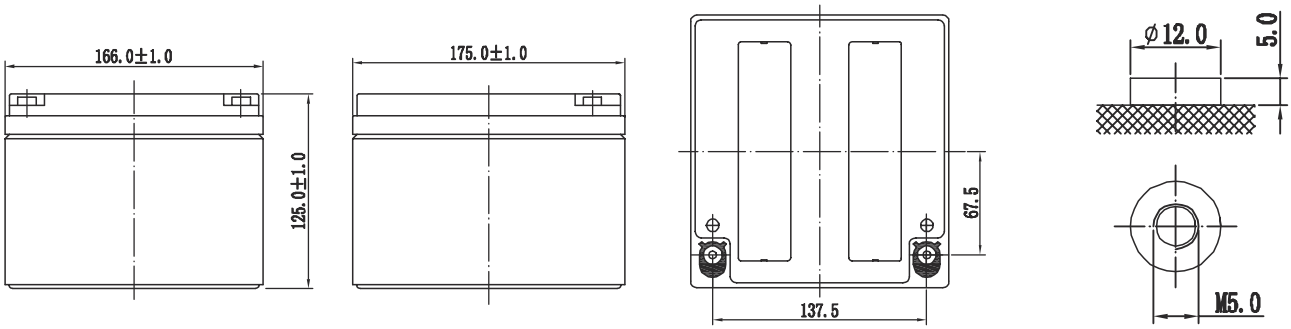

Constant current discharge characteristics: A (25°C)

F.V / Time	5 MIN	10 MIN	15 MIN	30 MIN	1 HR	3 HR	5 HR	10 HR	20 HR
1.60V	85.0	60.0	46.0	27.9	15.8	6.8	4.5	2.6	1.2
1.65V	79.5	56.3	43.3	26.3	15.1	6.54	4.34	2.52	1.19
1.70V	74.0	52.5	40.5	24.7	14.4	6.31	4.24	2.48	1.17
1.75V	68.5	48.8	37.8	23.1	13.7	6.09	4.13	2.44	1.16
1.80V	63.0	45.0	35.0	21.5	13.0	5.86	4.02	2.40	1.14

Constant current discharge characteristics: Watt (25°C)

F.V / Time	5 MIN	10 MIN	15 MIN	30 MIN	45 MIN	1 HR	2 HR	3 HR	5 HR
1.60V	150	107	82.2	50.0	36.5	29.0	17.7	13.0	8.83
1.65V	141	101	77.7	47.4	34.8	27.9	17.1	12.6	8.62
1.70V	131	94.3	73.1	44.8	33.0	26.8	16.4	12.2	8.42
1.75V	122	87.9	68.6	42.1	31.3	25.6	15.8	11.8	8.21
1.80V	112	81.5	64.0	39.5	29.5	24.5	15.1	11.4	8.00

Storage characteristic:

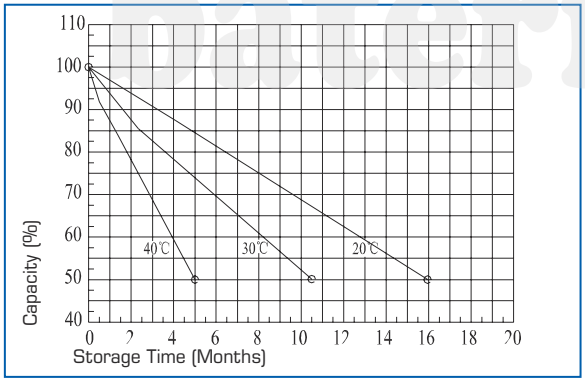

Capacity Factors with different Temperature:

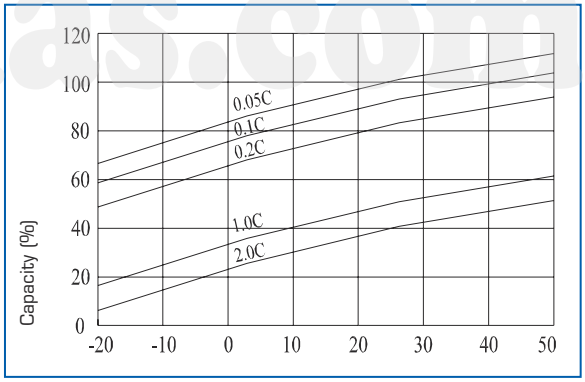

Charging Method:

Charge the batteries at least once every six months, if they are stored at 25°C

Constant Voltage (V)
-0.2C x 2h + 2.4–2.45V/Cell x 24h, max. Current 0.3CA

Constant Current (A)
-0.2C x 2h + 0.1CA x 12h

Fast
-0.2C x 2h + 0.3CA x 4.0h

baterias.com