Trojan® BATTERY COMPANY

DATA SHEET

L16H-AC

MODEL **L16H-AC with Bayonet Cap**
VOLTAGE **6**
MATERIAL **Polypropylene**
DIMENSIONS **Inches (mm)**
BATTERY **Deep-Cycle Flooded/Wet Lead-Acid Battery**
COLOR **Maroon**
WATERING **HydroLink™ Watering System**

6V

*Polyon™ Case

PRODUCT + PHYSICAL SPECIFICATIONS

BCI Group Size	Type	Voltage	Cell(s)	Terminal Type [G]	Dimensions [C] Inches (mm)			Weight Lbs. (kg)
					Length	Width	Height [F]	
903	L16H-AC*	6	3	6	11.66 (296)	6.94 (176)	16.74 (425)	125 (57)

ELECTRICAL SPECIFICATIONS

Cranking Performance		Capacity [A] Minutes		Capacity [B] Amp-Hours (AH)				Energy (kWh)	Internal Resistance (mΩ)	Short Circuit Current (amps)
C.C.A.[D] @ 0°F (-18°C)	C.A.[E] @ 32°F (0°C)	@ 25 Amps	@ 75 Amps	5-Hr	10-Hr	20-Hr	100-Hr	100-Hr		
—	—	935	245	357	400	435	483	2.89	—	—

batterias.com

CHARGING INSTRUCTIONS

Charger Voltage Settings (at 77°F/25°C)					
System Voltage	6V	12V	24V	36V	48V
Bulk Charge	7.41	14.82	29.64	44.46	59.28
Float Charge	6.75	13.50	27.00	40.50	54.00
Equalize Charge	8.10	16.20	32.40	48.60	64.80

Do not install or charge batteries in a sealed or non-ventilated compartment. Constant under or overcharging will damage the battery and shorten its life as with any battery.

CHARGING TEMPERATURE COMPENSATION

Add	Subtract
0.005 volt per cell for every 1°C below 25°C 0.0028 volt per cell for every 1°F below 77°F	0.005 volt per cell for every 1°C above 25°C 0.0028 volt per cell for every 1°F above 77°F

OPERATIONAL DATA

Operating Temperature	Self Discharge
-4°F to 113°F (-20°C to +45°C). At temperatures below 32°F (0°C) maintain a state of charge greater than 60%.	5 – 15% per month depending on storage temperature conditions.

STATE OF CHARGE MEASURE OF OPEN-CIRCUIT VOLTAGE

Percentage Charge	Specific Gravity	Cell	6 Volt
100	1.277	2.122	6.37
90	1.258	2.103	6.31
80	1.238	2.083	6.25
70	1.217	2.062	6.19
60	1.195	2.040	6.12
50	1.172	2.017	6.05
40	1.148	1.993	5.98
30	1.124	1.969	5.91
20	1.098	1.943	5.83
10	1.073	1.918	5.75

MADE IN USA

TRUE DEEP CYCLE

T2 Technology™

Designed in compliance with applicable BCI, DIN, BS and IEC standards.
Tested in compliance to BCI and IEC standards.

Battery Council International

TROJAN BATTERY COMPANY WITH QUALITY SYSTEM CERTIFIED BY DNV =ISO 9001:2008=

TERMINAL CONFIGURATIONS[G]

6	DT	Automotive Post & Stud Terminal
		Terminal Height Inches (mm) 0.79 (20) **Torque Values in-lb (Nm)** Stud: 95 –105 (11 – 12) / AP: 50 – 70 (6 – 8) **Bolt Size** 5/16"

BATTERY DIMENSIONS (shown with DT)

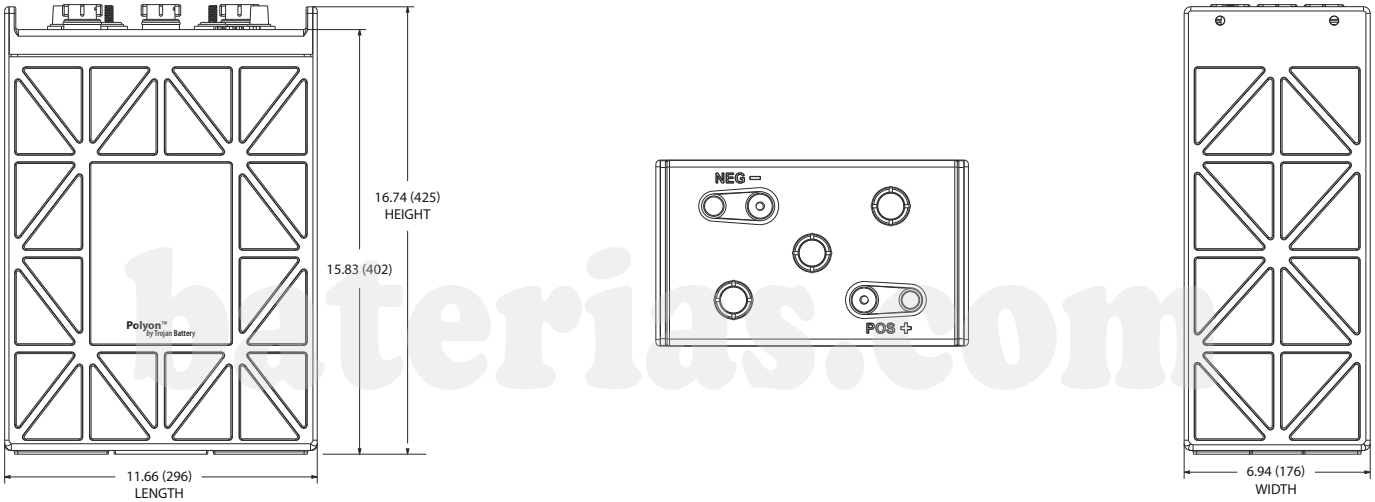

baterias.com

TROJAN L16H-AC PERFORMANCE

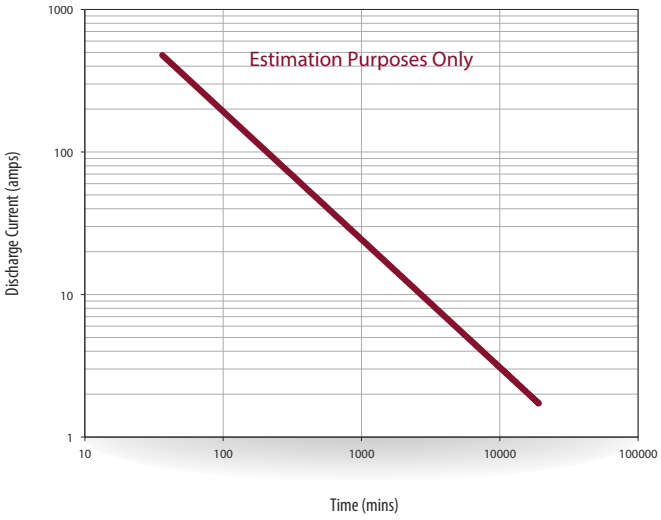

PERCENT CAPACITY VS. TEMPERATURE

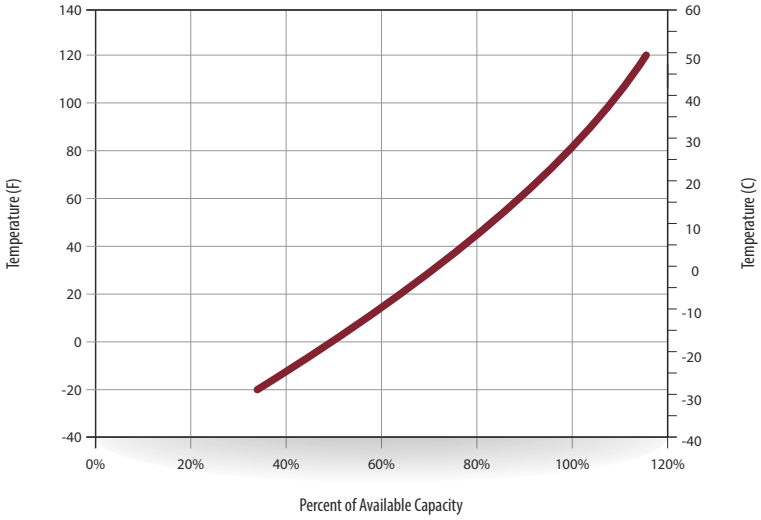

A. The number of minutes a battery can deliver when discharged at a constant rate at 80°F (27°C) and maintain a voltage above 1.75 V/cell. Capacities are based on peak performance.
B. The amount of amp-hours (AH) a battery can deliver when discharged at a constant rate at 80°F (27°C) and maintain a voltage above 1.75 V/cell. Capacities are based on peak performance.
C. Dimensions may vary depending on type of handle or terminal. Batteries should be mounted with 0.5 inches (12.7 mm) spacing minimum.
D. C.C.A. (Cold Cranking Amps) - the discharge load in amperes which a new, fully charged battery can maintain for 30 seconds at 0°F (-18°C) at a voltage above 1.2 V/cell.
E. C.A. (Cranking Amps) - the discharge load in amperes which a new, fully charged battery can maintain for 30 seconds at 32°F (0°C) at a voltage above 1.2 V/cell. This is sometimes referred to as marine cranking amps @ 32°F or M.C.A. @ 32°F.
F. Height taken from bottom of the battery to the highest point on the battery. Heights may vary depending on type of terminal.
G. Terminal images are representative only.

Trojan BATTERY COMPANY®
800.423.6569 / +1.562.236.3000 / trojanbattery.com

© 2016 Trojan Battery Company, LLC. All rights reserved. Trojan Battery Company is not liable for damages that may result from any information provided in or omitted from this publication, under any circumstances. Trojan Battery Company reserves the right to make adjustments to this publication at any time, without notice or obligation.