Power your life

Valve Regulated Lead Acid Battery

WPS26-12

Specifications

Nominal Voltage(V)

12V

Nominal Capacity

20 hour rate	(1.3A	to	10.50V)	26Ah
10 hour rate	(2.47A	to	10.50V)	24.7Ah
5 hour rate	(4.42A	to	10.20V)	22.1Ah
1 C	(26A	to	9.60V)	13.87Ah
3 C	(78A	to	9.60V)	9.1Ah

Weight

Approx. 8.0kg(17.6Lbs.)

Internal Resistance (at 1KHz)

Approx. 11 mΩ

Maximum Discharge Current for

5 seconds: 390A

Charging Methods at 25℃(77℉)

Maximum Charging Current：	7.8A
Standby use:	
Float Charging Voltage	13.5 to 13.8V
Coefficient -3.0mV/℃/cell	

Operating Temperature Range

Charge	-15℃(5℉)	to	40℃(104℉)
Discharge	-15℃(5℉)	to	50℃(122℉)
Storage	-15℃(5℉)	to	40℃(104℉)

Charge Retention (shelf life) at 20℃(68℉)

1 month	92%
3 month	90%
6 month	80%

Case Material

ABS UL94 HB
Option: Flammability resistance of (UL94 V-0)

Design Life

3-5 Years.

Terminal

F3

Dimensions

Length (L)	166+2-1 (6.54+0.08-0.04)
Width (W)	175+2-1 (6.89+0.08-0.04)
Height (H)	125+2-1 (4.92+0.08-0.04)
Overall Height (HT)	125+2-1 (4.92+0.08-0.04)

mm(inch)

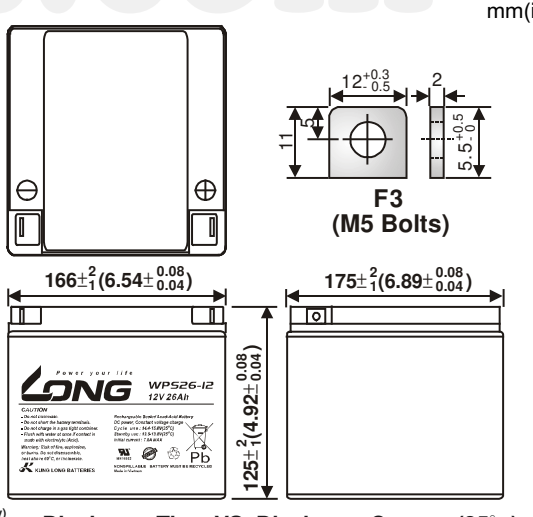

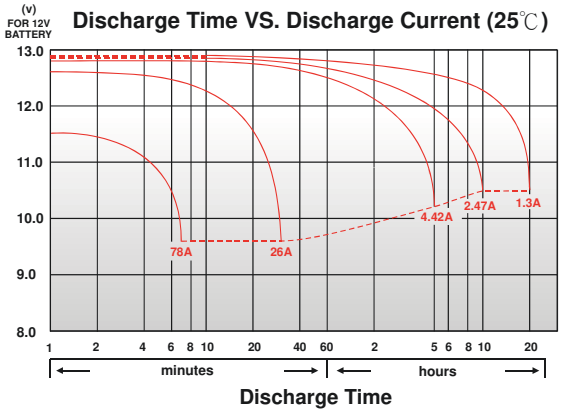

bateriasf.com

Power your life

Valve Regulated Lead Acid Battery

WPS26-12

Effect of Temperature on Capacity 25℃(77℉)

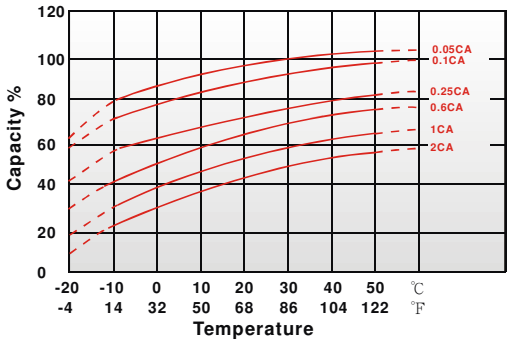

Capacity Retention Characteristic

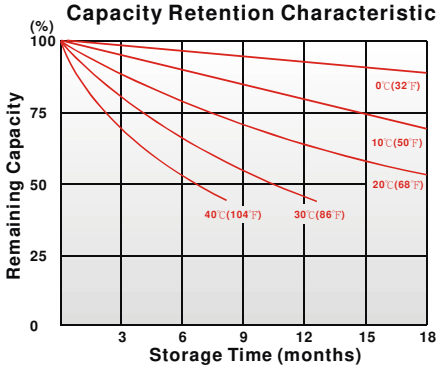

Trickle (or float) Service Life

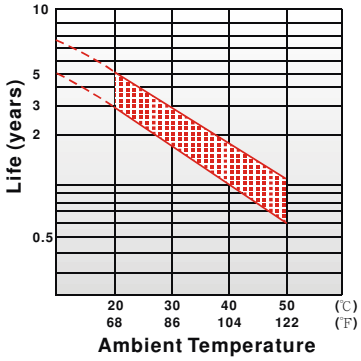

- PERFORMANCE DATA

Discharge Rates in Watts to Various End Voltages at 25℃(77℉)

Time \ End Voltage		1.85V	1.80V	1.75V	1.70V	1.67V	1.65V	1.60V
5	min	114	129	142	155	159	165	177
10	min	88.2	99.7	106	111	114	117	122
15	min	70.2	76.5	80.8	84.3	86.7	88.2	91.3
30	min	41.0	44.5	46.5	48.0	48.8	49.5	50.3
60	min	27.0	28.5	29.3	30.0	30.2	30.5	30.8
120	min	14.6	15.4	15.9	16.2	16.4	16.5	16.7
180	min	12.2	12.7	12.9	13.1	13.1	13.2	13.3
240	min	9.82	10.2	10.4	10.5	10.6	10.6	10.7
300	min	8.47	8.70	8.82	8.93	8.97	9.02	9.05
600	min	4.93	5.12	5.22	5.30	5.32	5.35	5.38
1200	min	2.53	2.62	2.68	2.73	2.75	2.77	2.78

- Discharge Rates in Amperes to Various End Voltages at 25℃(77℉)

Time \ End Voltage		1.85V	1.80V	1.75V	1.70V	1.67V	1.65V	1.60V
5	min	70.2	82.3	90.7	96.1	98.3	101	105
10	min	45.8	50.4	54.6	58.8	60.5	62.4	65.6
15	min	37.9	41.1	43.7	46.2	47.3	48.2	49.8
30	min	20.8	23.2	24.7	25.6	26.2	26.9	27.7
60	min	14.5	15.0	15.3	15.5	15.6	15.7	15.8
120	min	7.65	7.96	8.08	8.19	8.22	8.26	8.31
180	min	6.21	6.41	6.50	6.53	6.55	6.58	6.62
240	min	4.97	5.07	5.14	5.20	5.22	5.25	5.28
300	min	4.22	4.35	4.40	4.44	4.45	4.47	4.49
600	min	2.48	2.56	2.60	2.61	2.62	2.63	2.64
1200	min	1.29	1.33	1.35	1.36	1.37	1.38	1.39

All data on the spec. sheet is an average value:
The tolerance range : X<6min(+15%~-15%), 6min≦X<10min(+12%~-12%),10min ≦X < 60min(+8% ~-8%), X≧60min(+5%~-5%)

100420-1D

廣隆光電科技股份有限公司
KUNG LONG BATTERIES INDUSTRIAL CO., LTD.

Head Quarter Service TEL: +886-49-2254-777 FAX: +886-49-2255-139 E-mail: sales@mail.klb.com.tw
USA Customer Service TEL: +1-949-328-7936 FAX: +1-949-266-9917 E-mail: sales@kunglong.com
Vietnam Customer Service TEL: +84-72-3779666 FAX: +84-72-3779476 E-mail: sales@mail.klb.com.tw

Contents in this data sheet are subject to change for improvement without prior notice to users. For clarifications and updated information, please contact us.